Assembly instructions for SpaceShipOne

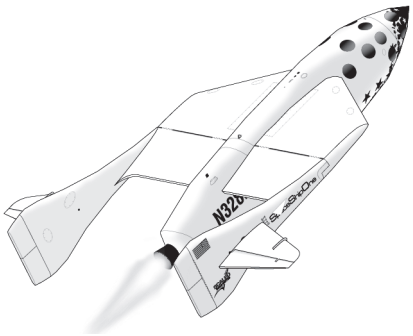

The SpaceShipOne story

In 1996 the X-Prize competition was initiated by a group of American business leaders. It offered a US$10 million award for the construction of a privately-funded vehicle capable of taking three people to an altitude of 100 kilometres, returning them safely to earth, and repeating the flight within two weeks. Over twenty teams from around the world subsequently entered this competition. In April 2003, aircraft manufacturer Scaled Composites LLC, backed by funding from entrepreneur Paul Allen, joined the race with an innovative launch system known as Tier One.

Tier One is the creation of Scaled president Burt Rutan, well known for his futuristic aircraft designs like the Beech Starship and the globe-circling Voyager. Rutan's solution to the X-prize problem is a two-stage system consisting of a jet-powered carrier aircraft called White Knight, and a rocket-propelled spacecraft known as SpaceShipOne. The White Knight is to carry SpaceShipOne to an altitude of about 15 km. (50,000 ft.), at which point the rocket craft is released and flies under its own power to reach the 100 km. target height.

The design of SpaceShipOne emphasizes simplicity and low cost. As with all Rutan creations it is visually striking, with stubby main wings and a twin-boom tail layout. The innovative rocket motor uses a rubber-like fuel with nitrous oxide gas as an oxidizer, providing safer and easier handling than conventional rocket fuels. For re-entry, the spacecraft's entire tailplane and the rear part of the wing tilt upward to a high-drag 'feather' configuration. As it approaches the ground, the tail returns to its normal flying position, and SpaceShipOne glides to a runway landing like a conventional aircraft. There are no control surfaces on the main wing, flight control being provided by stabilators on the tail booms and by outward-deflecting rudders.

SpaceShipOne's sealed cabin is a 'shirtsleeve' environment; the three occupants do not wear pressure suits, though oxygen masks are provided for emergencies. The cockpit layouts of White Knight and SpaceShipOne are similar, allowing pilots to train for the rocket plane while flying the carrier aircraft.

The flights take off and land at Scaled Composites' home base at Mojave California, and rocket launch and re-entry take place in the airspace of nearby Edwards Air Force Base. The first flight of the White Knight/SpaceShipOne combination occurred on May 20, 2003, with the first release and glide test of SpaceShipOne on August 7. On December 17, 2003 the first rocket-powered flight occurred, reaching a speed of Mach 1.2. SpaceShipOne was slightly damaged due to a landing gear failure after this flight, but repairs and modifications were made, and on 21 June 2004, pilot Mike Melvill took SpaceShipOne beyond 100 km. altitude, the boundary of space, and returned safely to earth.

The team was now ready to attempt the two flights that would win the X-Prize. The first took place on 29 September 2004, with Mike Melvill again at the controls and less than a week later, on October 4, Brian Binnie piloted SpaceShipOne to victory.

The Model

This model is a 1:48 scale replica of Scaled Composites' SpaceShipOne. Two versions are available, depicting either the first powered test in December 2003 (parts document **ss1_parts.pdf**) or the X-Prize qualifying flights in September and October 2004 (parts document **ss1x_parts.pdf**).

Print out the parts document on 8.5"x11" or A4 size white paper card stock suitable to your printer. 67 lb. cover stock (approx. 8.5 thousandths of an inch or 0,2 mm thick) is recommended.

A word of caution: this model is not suitable for assembly by young children, due to the use of sharp tools and the complexity of some assembly steps. Previous experience with card modeling is recommended. If you have any comments or suggestions regarding this kit, I can be reached by e-mail at models@currell.net

Tools

Before beginning, you will need the following tools and materials:

a) a sharp knife for cutting
b) a flat cutting surface
c) a ruler or straight edge
d) white glue
e) a scoring tool or blunt knife for creasing the fold lines
f) a glue applicator such as wooden toothpicks or a small paintbrush

Hints

a) Select a well-lit, comfortable work area that will remain undisturbed when you are not there.
b) Keep your hands and tools clean when working, to avoid getting glue on visible parts of the model.
c) It's easier to stay organized if you only cut out those parts you need for each step.
d) Make sure your knife is sharp. When cutting straight lines, use a straight-edge.
e) Study the diagrams carefully, and always test-fit the parts before applying glue.

Assembly

In these instructions, the directional terms are from the pilot's viewpoint facing in the direction of travel. 'Port' and 'starboard' refer to left and right sides respectively. Scoring of parts is indicated by thin black lines outside the part's outline, and by dashed or shaded lines on the part's surface. Score parts *before* cutting them out. In the diagrams, subassemblies are identified by a number within a circle (e.g. ②), corresponding to the step in which it was assembled.

Assemble and join the front and centre fuselage segments (**steps 1–3**). Each segment comprises an outer surface (the "skin" of the aircraft), a connecting strip and (except for the nose segment) a circular former to provide strength and maintain the segment's shape. To construct a typical segment (as shown in **step 1**) glue the connecting strip to the inside of the surface part. It is recommended that these parts be curled in the direction of their final shape before gluing (this will prevent buckling when the combined parts are curved later). The strips have a thin line along the centre, which must be lined up with the respective edges of the surface part. The segment is then rolled so the edges butt together and are held by the connecting strip. Once dry, the former is glued inside the assembly, as close to the narrow end as necessary to achieve a snug fit. Note that on the rear segments, the former is not a perfectly circular. In this case the blue printed arrow on the former must line up with the body seam. Add approximately 5 grams weight (equivalent to two US pennies) into one of the nose segments to ensure the model balances properly on its landing gear.

At this point choose whether the landing gear is to be built in the raised or lowered position.

Gear up: assemble the main gear fuselage segment (**step 5**) without opening the gear doors, and skip to **step 9**.

Gear down: Cut out the landing gear doors in segment surface A18 (**step 4**), and glue wheel well plates B10 and B11 to the inside, such that the printed shape shows through the door cutouts. Assemble the segment (**step 5**), then assemble and attach the landing gear support to the inside bottom of the segment (**step 6**), such that the side flaps are positioned at the bottom edge of the rectangular cutouts in the wheel well plates. Score and fold the wheel legs (**step 7**), then insert through the holes in the fuselage segment (**step 8**), gluing to the flaps on the internal support. The legs should extend at a 45 degree angle below the horizontal when viewed from the front (see diagram). Wrap the wheel supports C11 around the end of the legs as shown.

Assemble and join the rear fuselage segments (**step 9**) to the front fuselage. The shape of parts B21 and B22 differ depending on which version of the parts layout is used. Form the front and rear wing spars (**step 10**) and glue into the fuselage holes so that they protrude the same length on each side.

Assemble the starboard wing internal frame (**step 11**). Slide the frame on and off the fuselage wing spars to ensure it fits without difficulty, then attach wing surface (**step 12**). Note that the larger rib is located at the inboard edge of the wing's bottom surface. Glue the frame to the bottom surface and fold the top surface over, ensuring that the corner points touch at the outer rear wing. Attach the trailing edge strip C20.

Attach the completed wing to the fuselage (**step 13**) then assemble and attach the port wing (mirror image of the starboard).

Assemble the internal frame for the starboard tail boom (**step 14**) by gluing spacer strips C12 and C16 between side plates C4 and C6. Ensure that the strip labels 'top' and 'bottom' face in the correct direction. Attach the outer surface C28 to the internal frame (**step 15**). Precise location is important here, since the edge tabs of this piece wrap over the top and bottom of the boom and interlock with the surface piece on the opposite side. It is recommended that the tabs be curled in the direction of their final shape before attaching this piece. Ensure that the horizontal rudder line is aligned with the blue arrow printed on the internal frame. Carefully wrap the tabs over and attach to the blue markings printed on the opposite side of the frame. In a similar manner attach the surface piece C30 and wrap the tabs to the opposite side of the boom. Add end plate C24.

Glue the completed boom to the starboard wing (**step 16**), ensuring that the blue locating shape printed on the end of the boom is covered by the wing, and that the front edge of the boom lines up with the hinge line printed on the wing. Curl and attach wingtip C14. Assemble and attach the port boom and wingtip (mirror image of the starboard).

(**Step 17**) Fold the starboard horizontal stabilizer frame B26, and wrap inside the stabilizer surface B16, ensuring the larger rib is placed at the inboard edge of the surface piece. Attach the trailing edge strip C19 and the fence B24. Glue the horizontal stabilizer to the printed locating mark on the starboard boom (**step 18**), then build and attach the port horizontal stabilizer as a mirror image of the starboard. Attach the triangular strakes C27 to the printed locating marks in front of the horizontal stabilizers.

Glue together the inner and outer rocket cone surfaces (**step 19**), and roll into shape. It will probably be necessary to trim the inner surface edge slightly to achieve a good fit for the inner and outer seams. Glue into the opening at the rear of the fuselage. Fold the various surface details as shown and attach to the printed locating marks on the fuselage.

The final steps are optional depending on whether the landing gear is in the raised or lowered position.

Gear down: Assemble the wheels and attach to the ends of the landing gear legs (**step 20**) . Fold the support struts and attach the narrow end to the markings on the rear edge of the legs, and the wide end into the wheel wells. Glue the forward landing gear doors to the front edge of the legs, and the rear doors to the fuselage behind the wheel well opening. Assemble the nose skid and skid strut (**step 21**) and attach to the printed locating marks on the underside of the front fuselage.

Gear up: Assemble the nose skid (**step 22**) and glue along the underside of the front fuselage as shown.

1 Typical fuselage segment

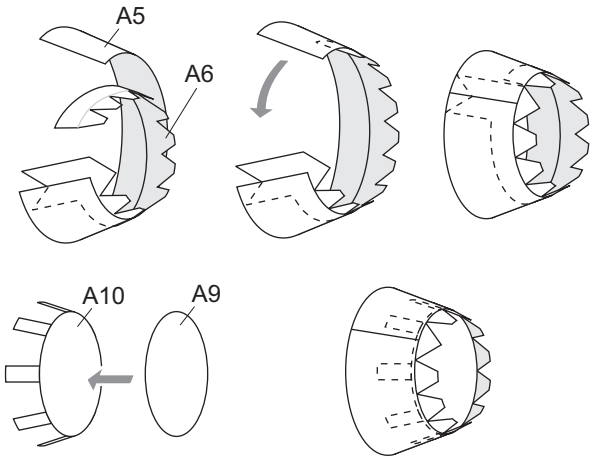

2 Front segments

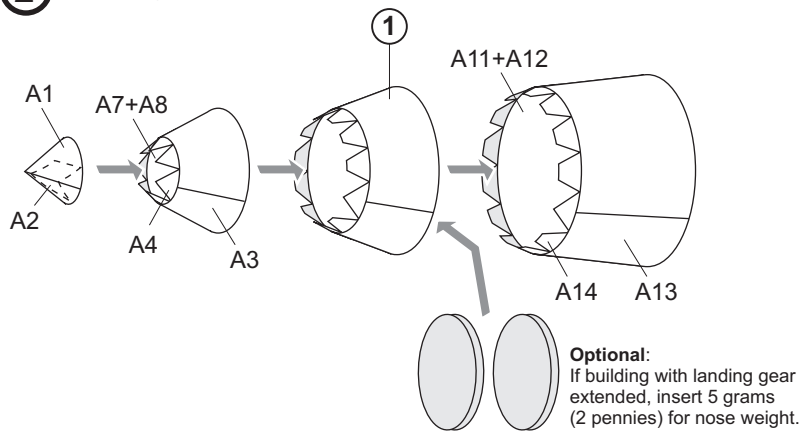

3 Centre segment

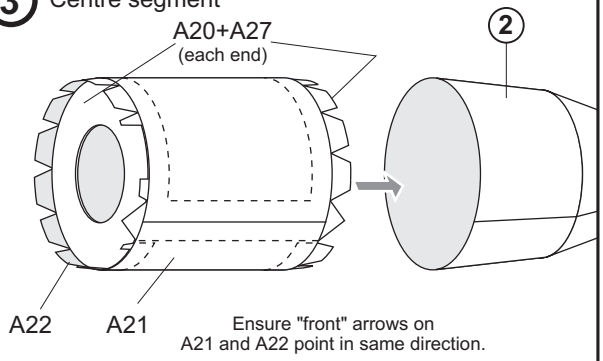

4 **Optional** (landing gear down) Open landing gear doors

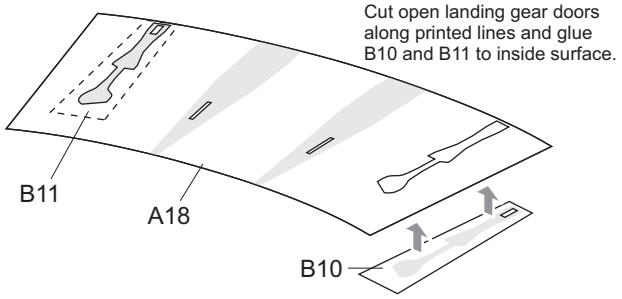

5 Main gear segment

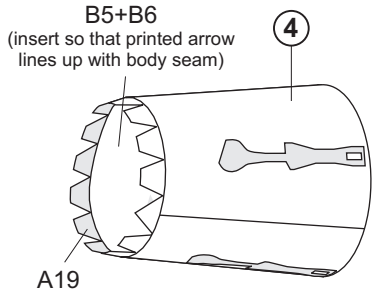

6 **Optional** (landing gear down) Landing gear support

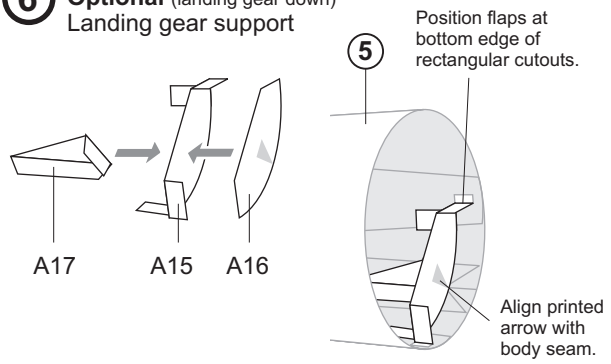

7 **Optional** (landing gear down) Main wheel legs (2 pieces)

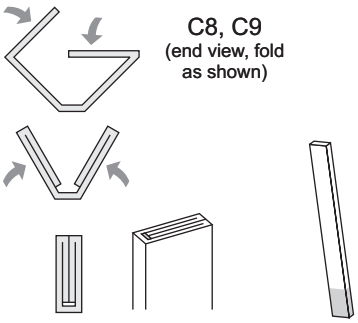

8 **Optional** (landing gear down) Attach legs

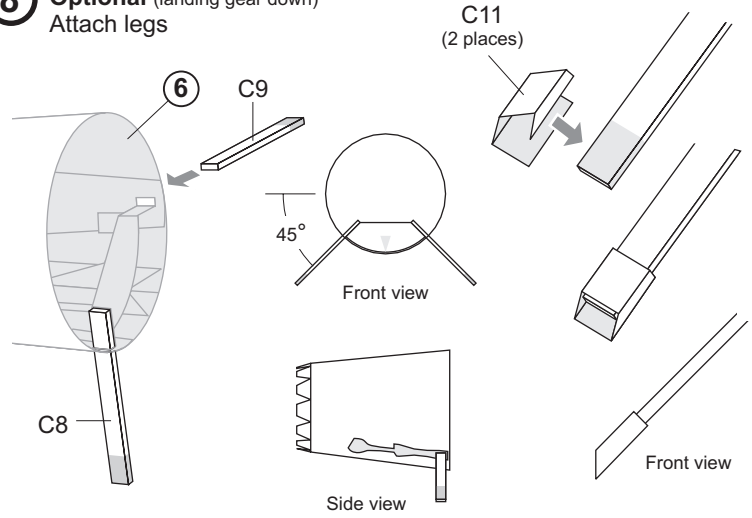

9 Rear Segments

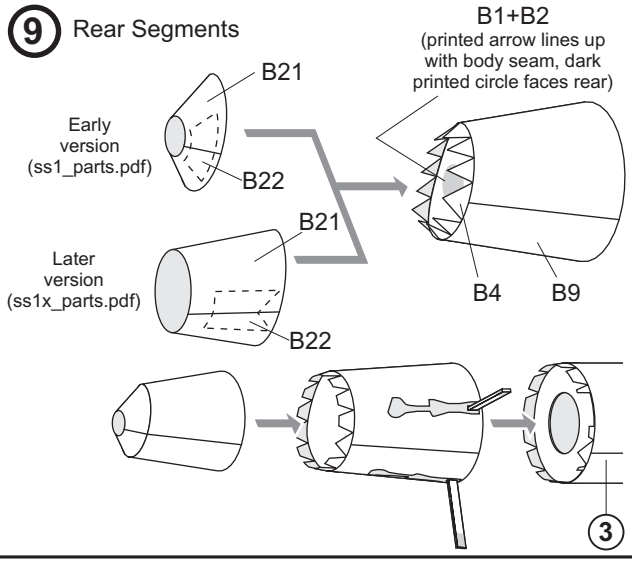

10 Wing spars

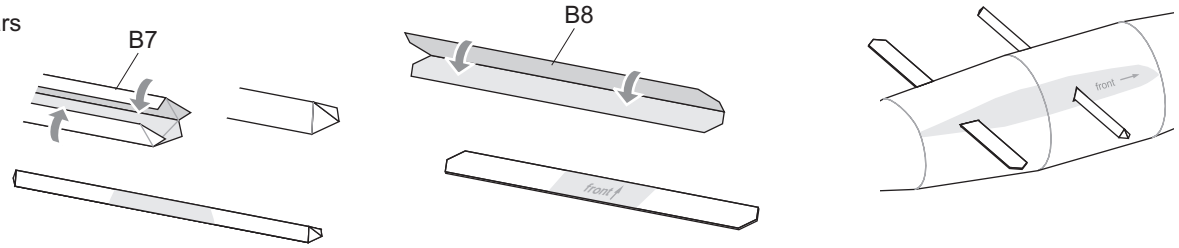

11 Starboard wing internal frame

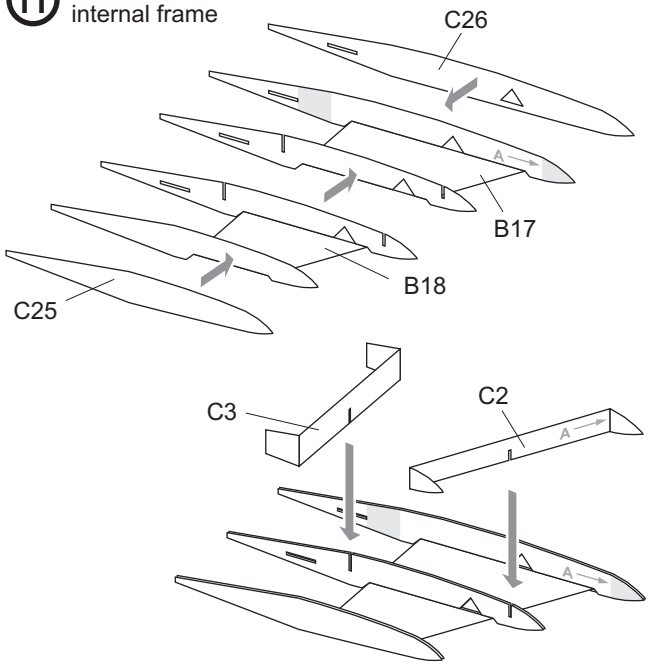

12 Attach wing surface to internal frame

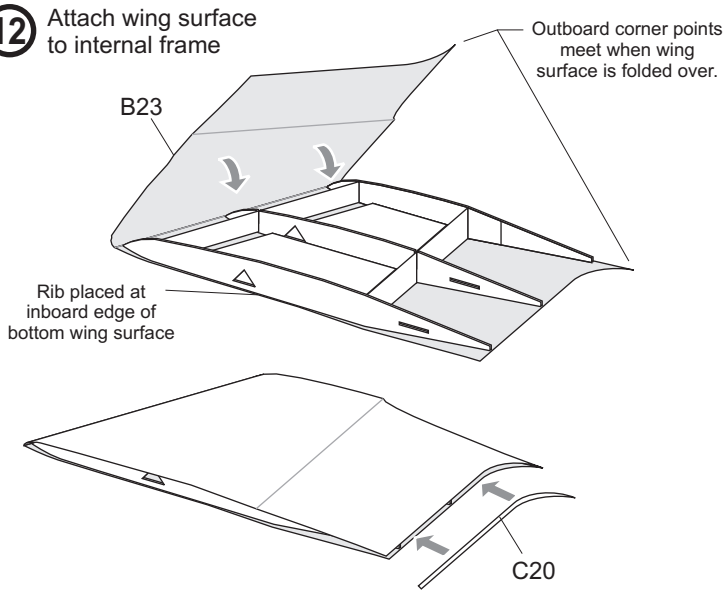

13 Attach wings to fuselage

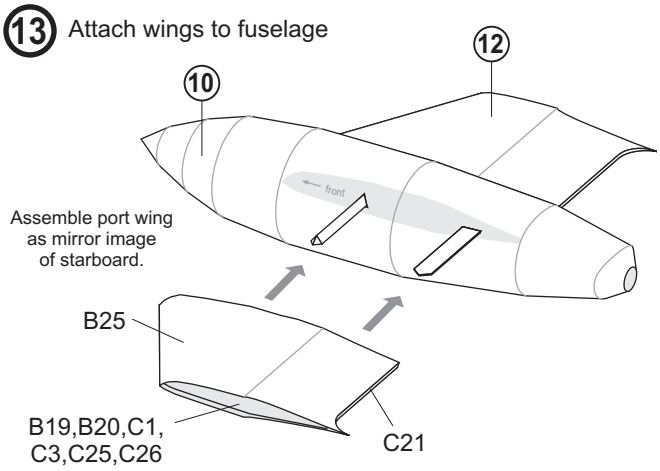

14 Starboard boom internal frame

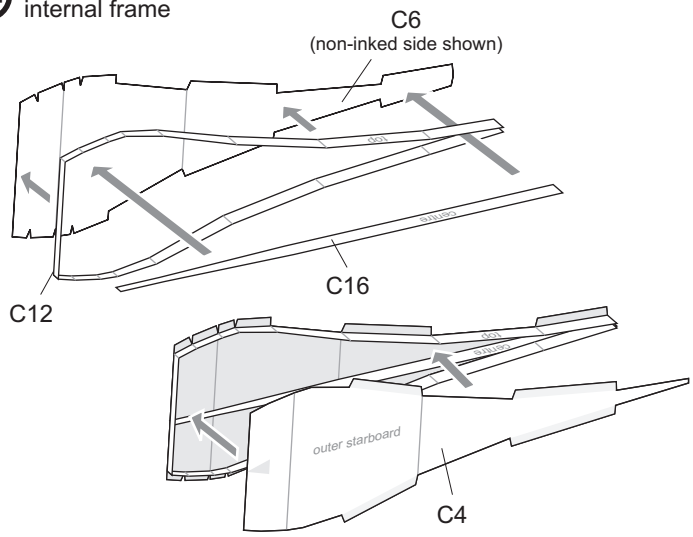

15 Attach outer surface to internal frame

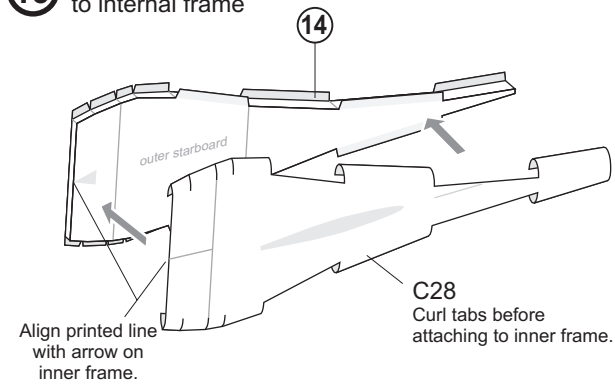

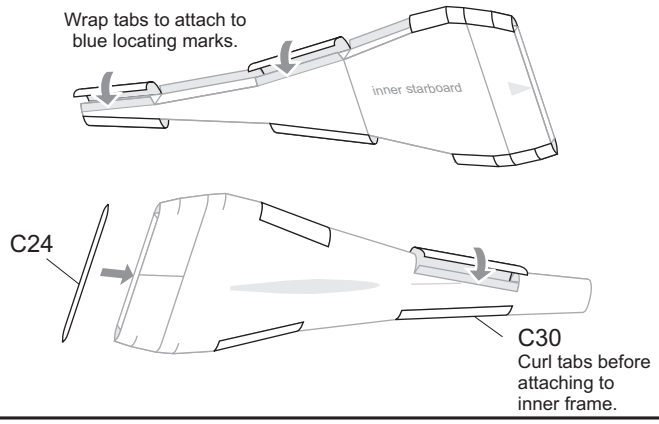

16 Attach booms

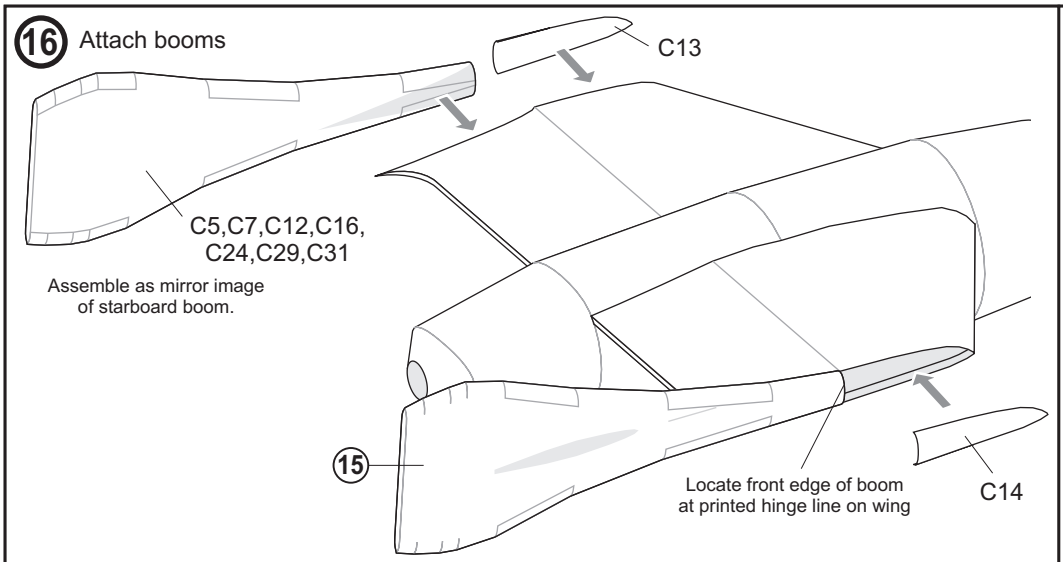

17 Starboard horizontal stabilizer

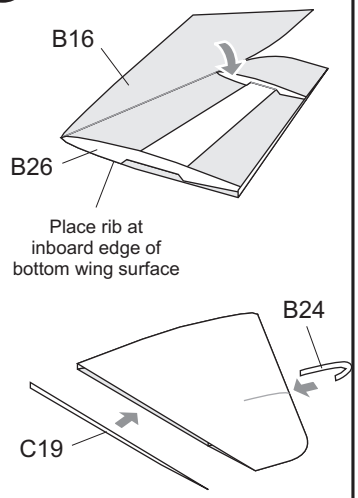

18 Attach horizontal stabilizers and strakes

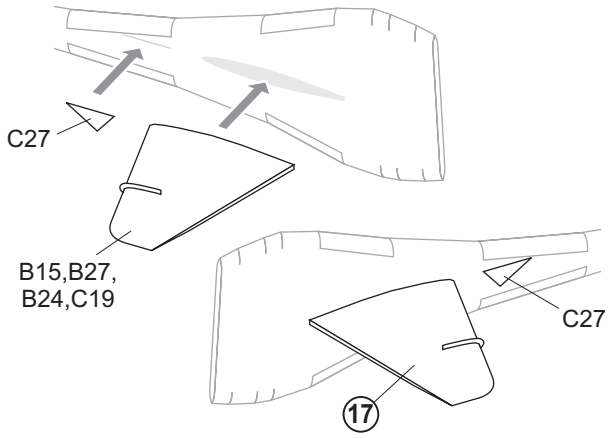

19 Rocket cone and surface details

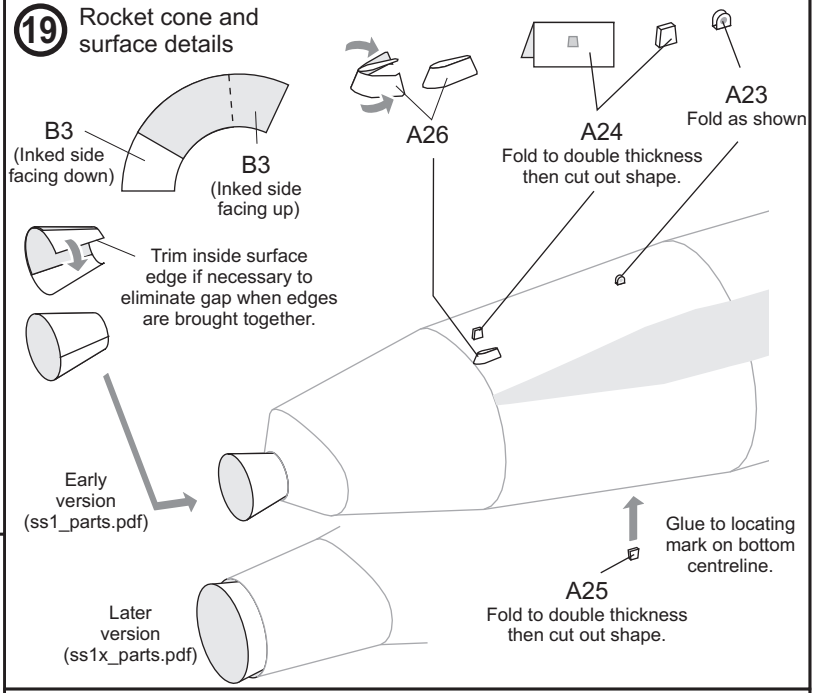

20 **Optional** (landing gear down) Main landing gear details

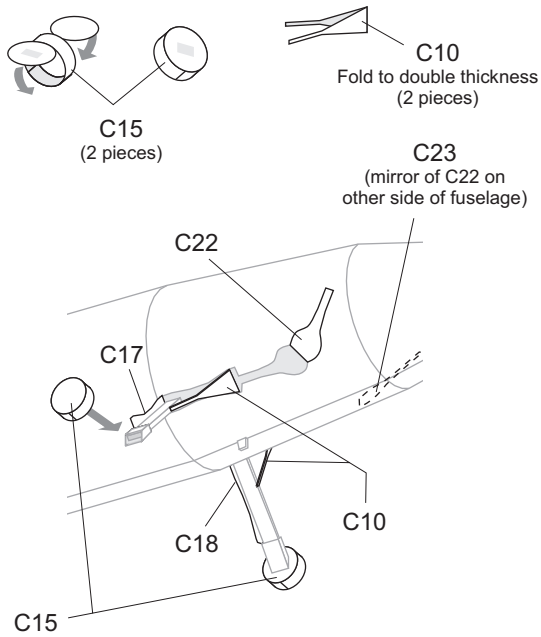

21 **Optional** (landing gear down) Nose skid

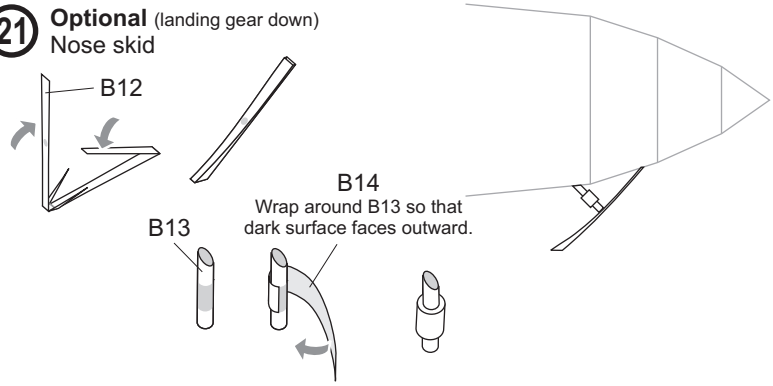

22 **Optional** (landing gear up) Nose skid